LASERLOGY

LS-C SERIES



CO2 LASER

Tecnology, quality & service

LASER MARKING



Laser marking allows you to create precise and permanent markings, even in hard-to-reach areas, through a fast and flexible process.

LASERLOGY's innovative solutions allow you to enter information about work pieces as part of your production configuration. The permanence of the laser marks guarantees optimum traceability. In addition, contact-less marking has several advantages, low material tension and low costs due to the absence of consumables.

Our pillars

TECHNOLOGY

Everything we do is based on the deployment of the latest laser technologies applied to the industry.

Our company enhances the things that move people. We develop and design solutions with a high technological value, always keeping the client's needs as a global focus.

SERVICE

Our service begins long before a laser system is installed.

Customer advice, feasibility analysis and project management are the pillars on which our concept of success is based. A global network of experts at the service of our customers.

QUALITY

In our company, each employee is involved and sensitized, resulting in high quality products and high level service.

Technological know-how and a great sense of the important form the basis of our innovative and high quality products.

LS-C SERIES laser marker

CO2 LASER TECHNOLOGY

LS-C Series laser marker utilizes a sealed CO2 RF laser source as a laser generating medium. These systems commonly replace other marking technologies such as inkjet or labeling, due to CO2 lasers achieve a permanent and high quality marking, even at high speeds.

CO2 laser technology allows to perform marking and engraving in a wide range of materials, such as acrylic, leather, paper, cardboard, ceramics, glass, stone, wood, PET, plastics, coated metals, etc.



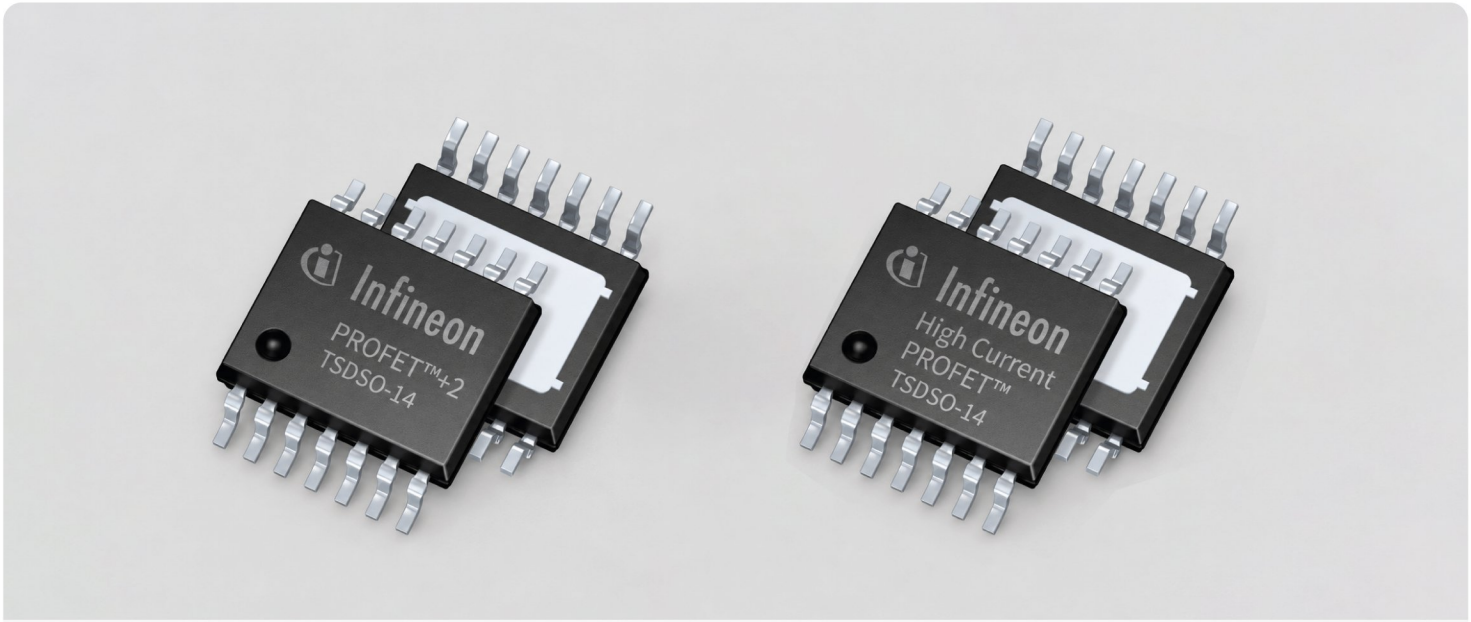

HIGH QUALITY MARKING

The LS-C Series takes advantage of various new technologies compared to conventional models in order to get high definition marking.

Material processing is controlled by adjusting the laser power, scanning speed and frequency for each object (line, text, logo, etc).

The result is a beautiful and high-quality mark even at high speeds.

The combination of a high-speed galvo scanner and a output laser power up to 30W allows to perform a quick and accurate marking in a wide range of materials.

Versatility

MARKING AREA

The LS-C series offers the possibility to install 4 different optical configurations to suit the needs of each application. **F210** standard focal (140x140mm work area) offers the best compromise between marking field and resolution. It is available as options **F100** (70x70mm work area) and **F160** (110x110mm work area) for high resolution applications and **F300** (210x210mm work area) for wide marking field applications.

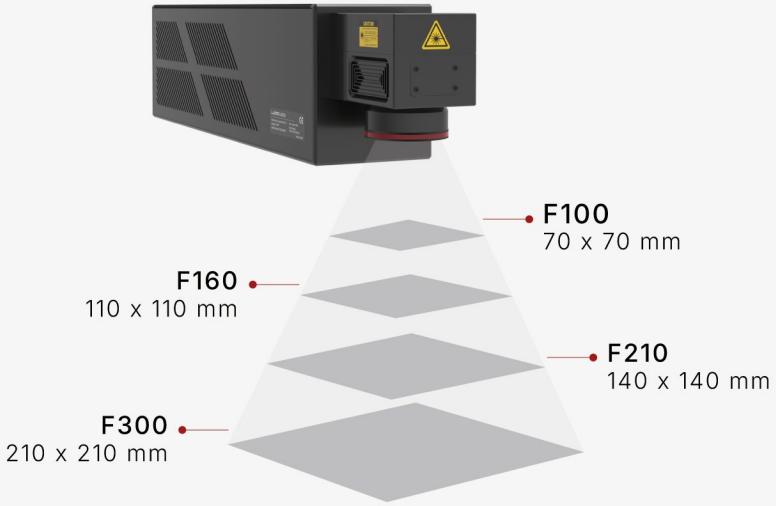



LS-CP VERSION

Due to the LS-CP version with 9.3 µm wave-length, it is possible to mark clear plastics like PET, Kapton and others with outstanding quality. LS-CP version is useful for processing materials that are highly absorptive of this wavelength.

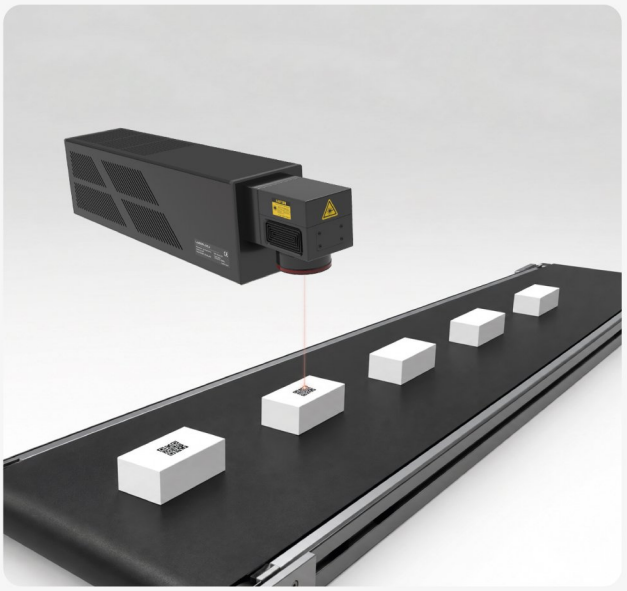

MOTF (MARKING ON THE FLY)

"Marking On The Fly" feature lets to mark moving workpieces. This type of marking is used for continuous manufacturing processes where any standstill of the production line would be uneconomical.

Laser processes



MARKING & CODING

Laser marking and coding are closely related applications. Marking involves physically creating a contrasting surface mark on the target material by discoloration or surface melting. Coding is a type of marking, however instead of marking with a static graphic or text, the mark varies, either from item to item as in a serial number, or from batch to batch as in an expiration date.

ENGRAVING

Engraving creates depth into the surface of a material by removing the material substrate leaving a depression. This can be useful for marking materials that do not change color when absorbing CO2 laser light, since it creates a shadowing effect that provides contrast. Engraving is a common type of laser “mark”, creating deeper marks more resistant to wear for coding or serialization.





ABLATION

The removal of a layer of material via laser processing is ablation. CO2 laser wavelengths are absorbed more efficiently by certain materials, and used selectively to remove one material from the surface of another. Ablation includes removing plastic coatings, ink, paint, or thin films from other substrates.

Laser processes

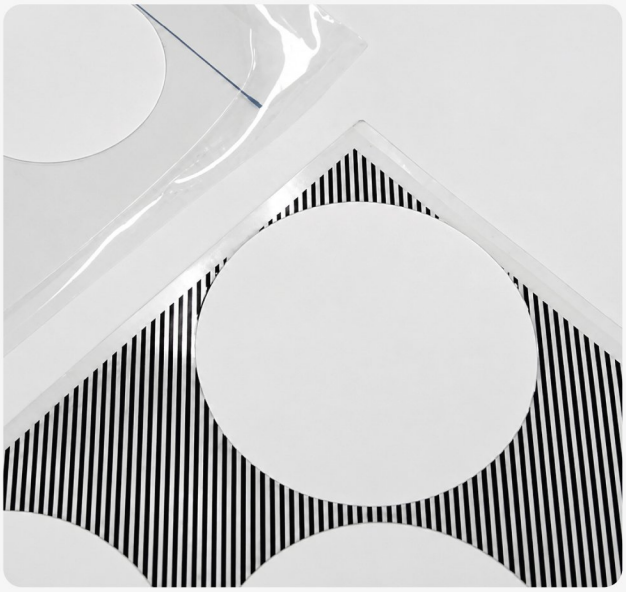

CUTTING

LS-C Series can cut some thin materials like plastics, paper, or textile materials with incredible accuracy. Laser cutting can accommodate almost any geometry, including straight lines and geometric or organic shapes.
The laser has no moving parts to wear or break down, and little required maintenance, reducing the total cost of ownership when compared to traditional mechanical cutting equipment.

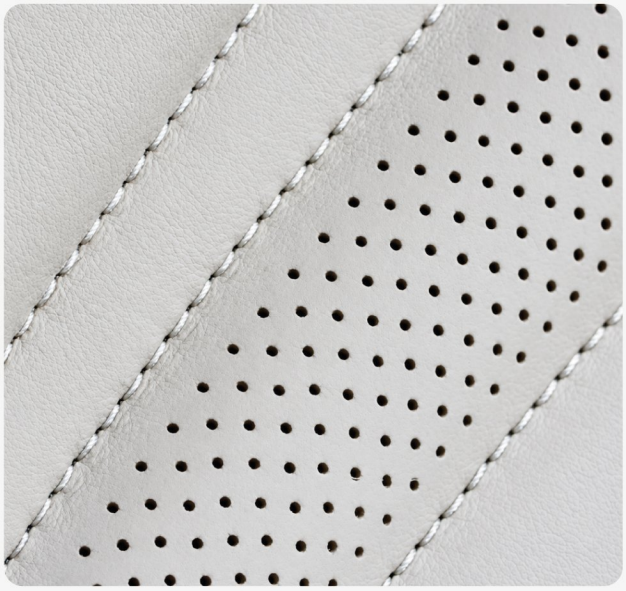

DRILLING & PERFORATING

Laser drilling and perforating application requires a balance of high peak power and good rise/fall times to ensure fast throughput. When drilling and perforating, coupling the energy into the material efficiently yields clean, accurate holes through the material. The laser operates in a pulsed mode to remove material steadily, until penetration occurs and a hole forms.



TEXTURING

CO2 laser texturing of materials is a surface modification process that alters the roughness, relief, and aesthetic or functional finish of a substrate through controlled, contactless modification of its outer layer. It enables the creation of precise textures and finishes, adapting to the characteristics and requirements of each material.

Sample applications

AUTOMOTIVE INDUSTRY



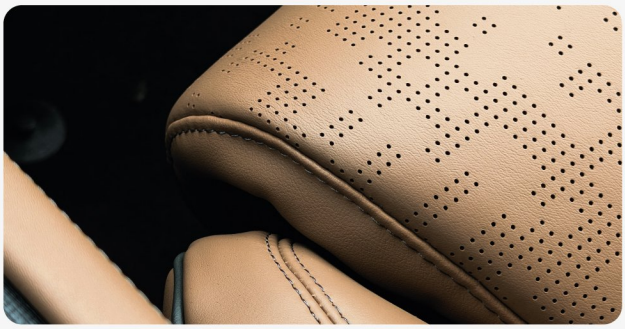



FOOD INDUSTRY





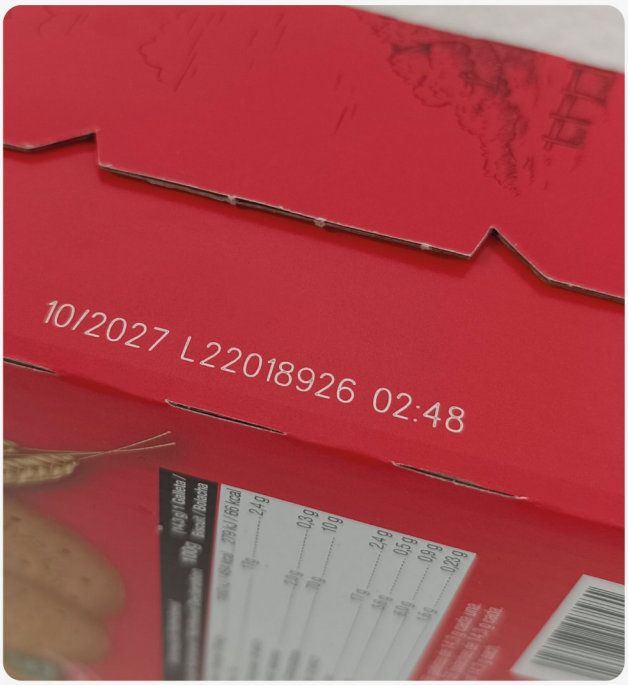

Sample applications

MEDICAL AND PHARMACEUTICAL INDUSTRY







ELECTRICAL AND ELECTRONICS INDUSTRY

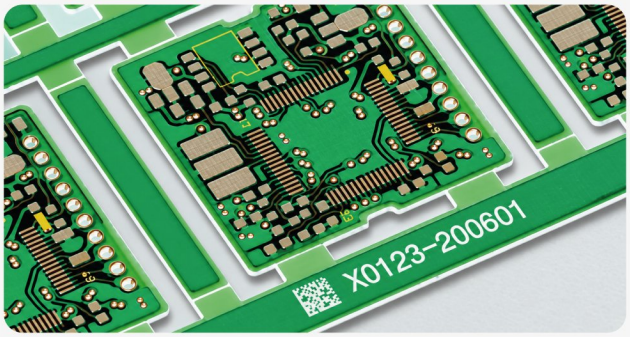

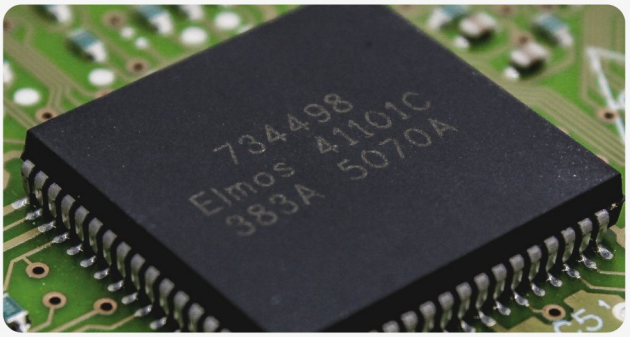

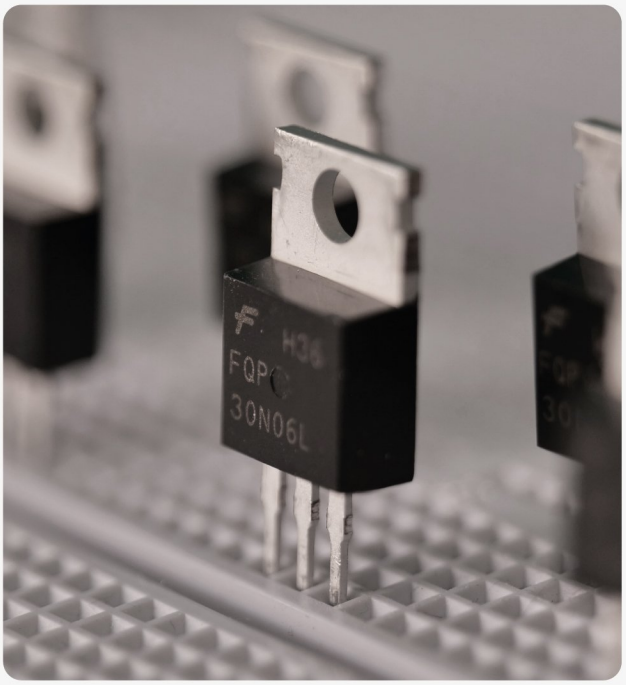

Technical specifications

FEATURES

Know all the details and characteristics of our equipment. If you need to expand this information or learn more about our equipment, contact our support service.

MODEL	LS-20C	LS-20CP	LS-30C	LS-30CP
LASER POWER	20W	20W	30W	30W
MARKING AREA	70x70mm, 110x110mm, 140x140mm or 210x210mm			
LASER TYPE	Sealed-off CO2 RF			
WAVELENGTH	10.6 µm	9.3 µm	10.6 µm	9.3 µm
FREQUENCY	0-25 KHz			
LASER GUIDE	Semiconductor λ = 655nm, laser class 2; 1mW			
MARKING METHOD	Galvanometer scanning			
MAX. SCANNING SPEED	12000 mm/sec			
SOFTWARE	LogyMark			
TYPE OF CHARACTERS	Capital & small characters, numerals, symbols, and other special characters.			
1D/2D CODE FORMATS	CODE39, CODE128, ITF2/5, NW-7, JAN/UPC/EAN, RSS 14, RSS limited, RSS expanded (GS1 Databar), GS1 Data Matrix, QR, Micro QR, Data Matrix (ECC200), etc.			
LOGOS/GRAPHICS FORMATS	DXF, SVG, BMP, HPGL, JPEG, AI, EPS, etc.			
OPERATING TEMPERATURE	0 to +40°C (no condensation or frost), storage: -10 to 60°C			
OPERATING HUMIDITY	35 to 75% RH (no condensation or frost)			
COOLING	Forced-air cooling			
SUPPLY VOLTAGE	90 to 132VAC or 180 to 264VAC, 50/60Hz			
POWER CONSUMPTION	< 600W		< 775W	
COMMUNICATION PORTS	Digital I/Os, Ethernet (TCP/IP)			
MARKING CONDITION	Static and Marking on the fly			
INTERCONNECTION CABLES LENGTH	5 meters (other lengths on demand)			
HEAD WEIGHT	17 Kg			
CONTROLLER WEIGHT	25 Kg			

Dimensions



LASER CONTROLLER

Compact and easy to integrate into your machine or production line. Check the dimensions or request the 3D files in order to verify your project.

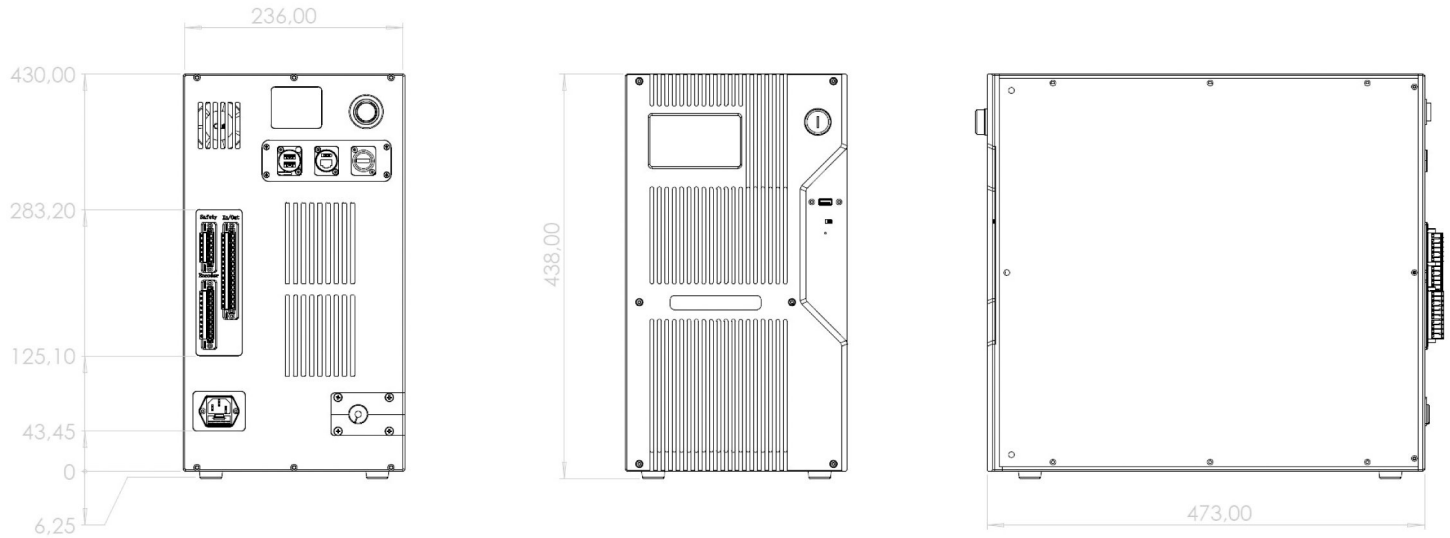

All dimensions are expresed in mm.

Dimensions





LASER HEAD

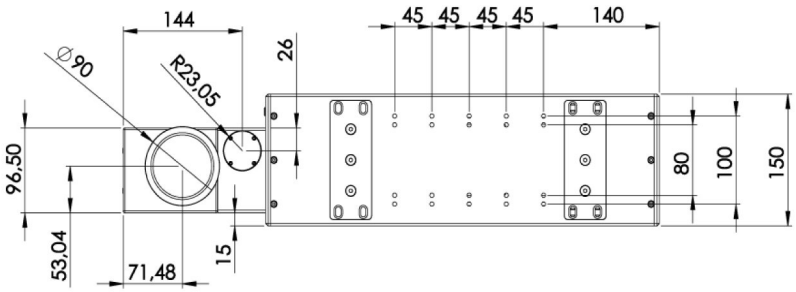

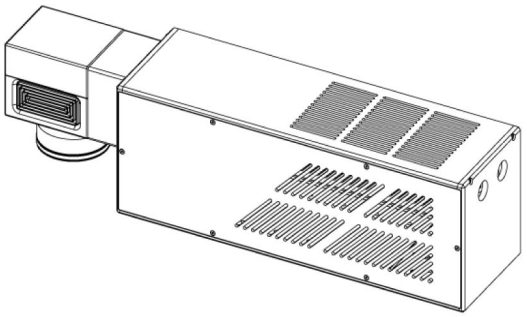

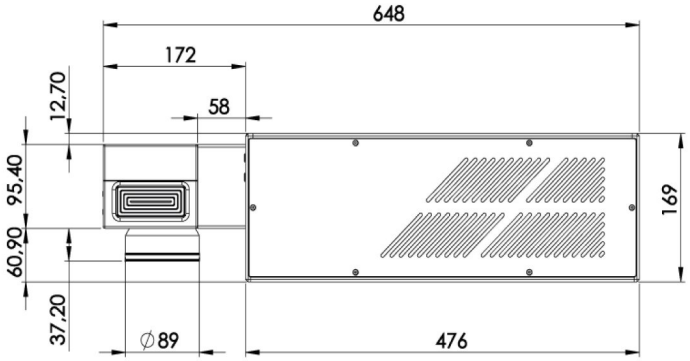

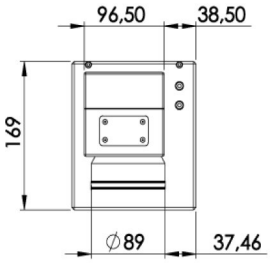

All dimensions are expresed in mm.



LASERLOGY

SPAIN

Head office

Polígono Industrial A Granxa, Rúa C, Paralela 4, 118 - 36475, O Porriño (Pontevedra)

(+34) 986 596 706

info@laserlogy.com

MEXICO

Technical Support & Sales

Parque Industrial Colosio, Calle 3, 459 - Colonia Balcones de la Aurora, 25298, Saltillo - Coahuila

(+52) 844 459 3605

ventas.mx@laserlogy.com

© Copyright 2019 - 2026 | Logy Lasertech S.L.U. | All Rights Reserved.